Titan
REMOTE STARTERS

Installation Guide

TS 141A

2-Way LED Remote Starter

TEXT START READY

For Automatic Transmission Only

POWERED BY Titan INNOVATIONS

www.titaninnovations.ca

Toll Free Tech Support

888-852-5703

Revision 2.01

Important Safety Notes- Please Read The Following

The owner/user MUST INSTALL a CARBON MONOXIDE DETECTOR in the living area near to where the vehicle is being stored or parked. It is the sole responsibility of the owner/user to keep the remote transmitters away from the reach of children and handle with care so that the system does not unintentionally start. When the vehicle is parked in an enclosed /partially enclosed area (*ex: garage, car port...),* being serviced (*ex: oil change)* or if the vehicle is loaned to an operator not familiar with a remote starter, the system MUST BE placed in Service (Valet) Mode.

MANUAL TRANSMISSION STARTERS the installation of a remote starter MUST only be done with a specified manual transmission starter. It is the sole responsibility of the vehicles owner to insure that the vehicle is left with the transmission in neutral position when the remote starter is in use. The manual transmission starter is designed to be an added measure of safety ONLY! The manufacturer does not guarantee or insure against any damages or loss of life that could result in the event of a remote starter starting while the vehicle is in gear. Manual transmission models are designed only to act as a deterrent against the vehicle starting in gear, this is the vehicle's owner's and operator's responsibility.

NEVER OPERATE THE SYSTEM IN AN ENCLOSED/ PARTIALLY ENCLOSED AREA!

System Service Mode (Valet Mode)

System **Service Mode** will disable the remote starter. This will only effect the remote start portion of the system. The optional lock, unlock and trunk release features will still be operational. When the vehicle is to have any under hood or service work done, the system must be placed into **Service Mode**. This feature may also be used if a transmitter is lost, damaged or if the system malfunctions.

ENTERING SERVICE MODE

1. Turn the ignition key to the On position.
2. Press and hold the Program Button (Located on the antenna) for 5 seconds or until the horn (optional) honks five times.

NOTE: The LEDs on the antenna will turn on solid to confirm Service Mode. If the ✪ button is pressed while the system is in Service Mode the park lights will flash 3 times slowly.

EXITING SERVICE MODE

1. Turn the ignition key to the On position.
2. Press and hold the Program Button (Located on the antenna) for 5 seconds or until the horn (optional) honks two times.

NOTE: The LEDs on the Antenna will turn off and the remote starter functions will be re-enabled.

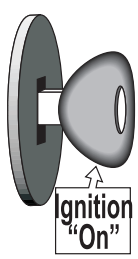

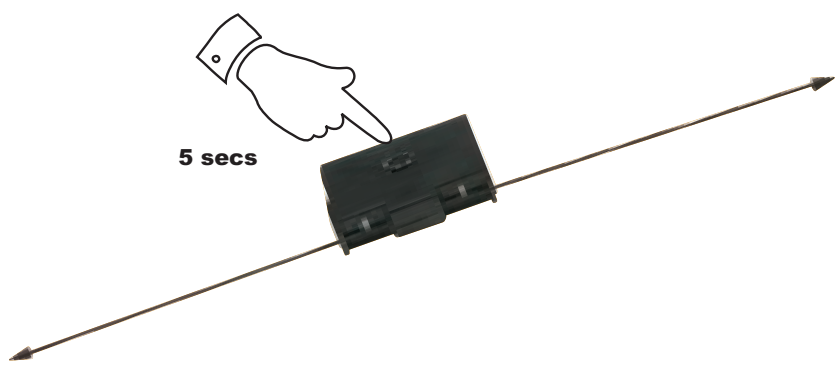

ATTENTION:

TO AVOID SERIOUS INJURY, this remote start system must be set into Service Mode before <u>any under hood servicing is started</u>. Service Mode will prevent the vehicle from starting while the vehicle is being serviced. It is the sole responsibility of the vehicle's owner to place the system into Service Mode. The manufacture accepts no responsibility for accidental starting of the vehicle while the vehicle is being serviced.

TS141A

Wiring diagram

*The ouput on the PINK/WHITE wire is determined by the position of the jumper

FUNCTION	JUMPER POSITION
Start signal output when remote start	JP1
Accessory output when remote start	JP2
Ignition signal output when remote start	JP3

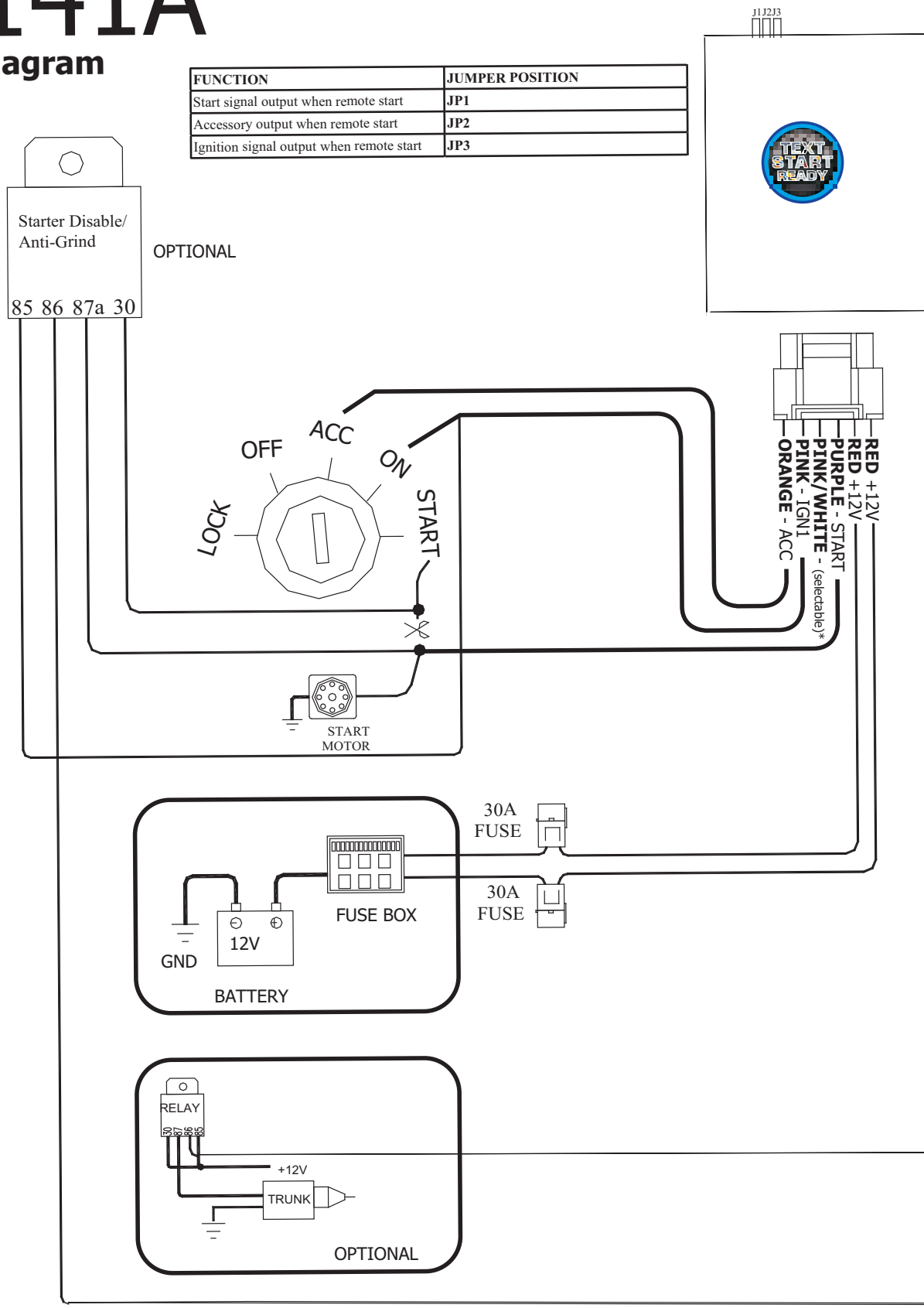

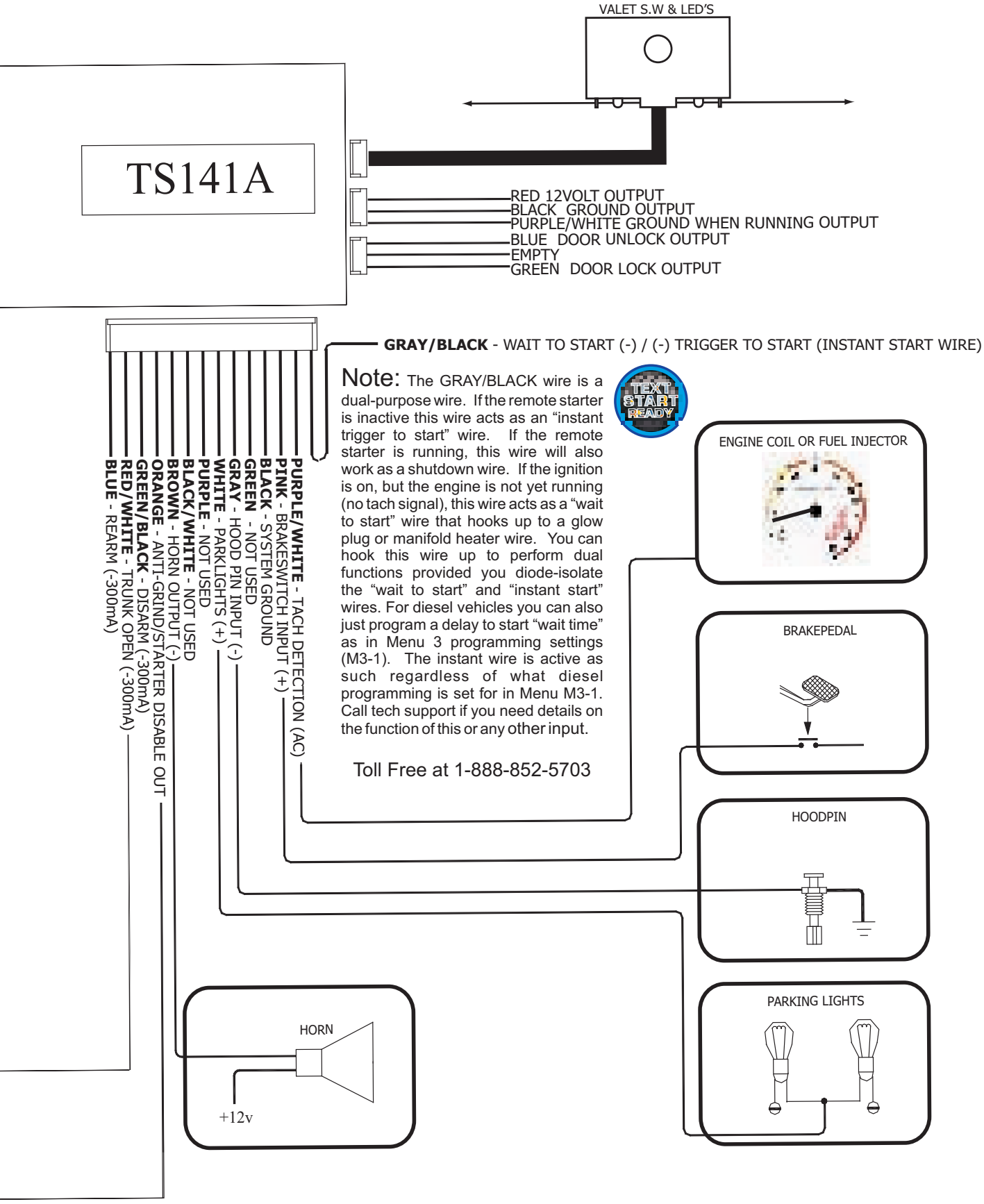
VALET S.W & LED'S
TS141A
RED 12VOLT OUTPUT
BLACK GROUND OUTPUT
PURPLE/WHITE GROUND WHEN RUNNING OUTPUT
BLUE DOOR UNLOCK OUTPUT
EMPTY
GREEN DOOR LOCK OUTPUT
GRAY/BLACK - WAIT TO START (-) / (-) TRIGGER TO START (INSTANT START WIRE)
PURPLE/WHITE - TACH DETECTION (AC)
PINK - BRAKESWITCH INPUT (+)
BLACK - SYSTEM GROUND
GREEN - NOT USED
GRAY - HOOD PIN INPUT (-)
WHITE - PARKLIGHTS (+)
PURPLE - NOT USED
BLACK/WHITE - NOT USED
BROWN - HORN OUTPUT (-)
ORANGE - ANTI-GRIND/STARTER DISABLE OUT
GREEN/BLACK - DISARM (-300mA)
RED/WHITE - TRUNK OPEN (-300mA)
BLUE - REARM (-300mA)
Note: The GRAY/BLACK wire is a dual-purpose wire. If the remote starter is inactive this wire acts as an "instant trigger to start" wire. If the remote starter is running, this wire will also work as a shutdown wire. If the ignition is on, but the engine is not yet running (no tach signal), this wire acts as a "wait to start" wire that hooks up to a glow plug or manifold heater wire. You can hook this wire up to perform dual functions provided you diode-isolate the "wait to start" and "instant start" wires. For diesel vehicles you can also just program a delay to start "wait time" as in Menu 3 programming settings (M3-1). The instant wire is active as such regardless of what diesel programming is set for in Menu M3-1. Call tech support if you need details on the function of this or any other input.
Toll Free at 1-888-852-5703
TEXT START READY
ENGINE COIL OR FUEL INJECTOR
BRAKEPEDAL
HOODPIN
PARKING LIGHTS
HORN
+12v

6 Pin Connector

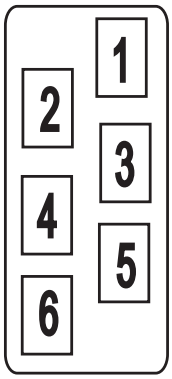

PURPLE	Starter Output (+)
ORANGE	Heater/Accessory Output (+)
RED	12volt Input (+)30amp
RED	12volt Input (+)30amp
PINK/WHITE*	Selectable Output (+)*
PINK	Ignition Output (+)

Pin Connector Layout 14 Pin Auxiliary Connector

1	BLUE	Re-arm Output (-)250ma
2	RED/WHITE	Trunk Release Output (-)250ma
3	GREEN/BLACK	Dis-arm Output (-)250ma
4	ORANGE	Anti-Grind(GWR)/Starter Disable Out
5	BROWN	Horn Output (-)250ma
6	BLACK/WHITE	No Connection
7	VIOLET	No Connection
8	WHITE	Park Light Output (+)10amp
9	GRAY	Hood Pin Switch Input (-)
10	GREEN	No Connection
11	BLACK	System Ground Input (-)
12	PINK	Brake Light Switch Input (+)
13	VIOLET/WHITE	Tach Detection Input (A/C)***
14	GRAY/BLACK	Wait To Start/Instant Start Input (-)

3 Pin Keyless Red Plug

1	GREEN	Door Lock Output (-)250ma
2	EMPTY	12v Output (+)250ma (see notes)
3	BLUE	Door Unlock Output (-)250ma

3 pin Bypass White Plug

1	WHITE/VIOLET	(-) While Running Output (-)250ma
2	BLACK	Ground Output (-)250ma
3	RED	12Volt Output (+)250ma

Wiring Side Connectors

*The center pin of the keyless entry harness is ONLY available with plug-in devices such as the INV200US, PDLM3, or PDLMRUS.
Overloading this output will damage the remote starter.

Door Lock Output (-)250ma	**GREEN**
12v Output (+)250ma (see notes)	**RED***
Door Unlock Output (-)250ma	**BLUE**

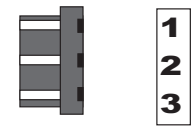

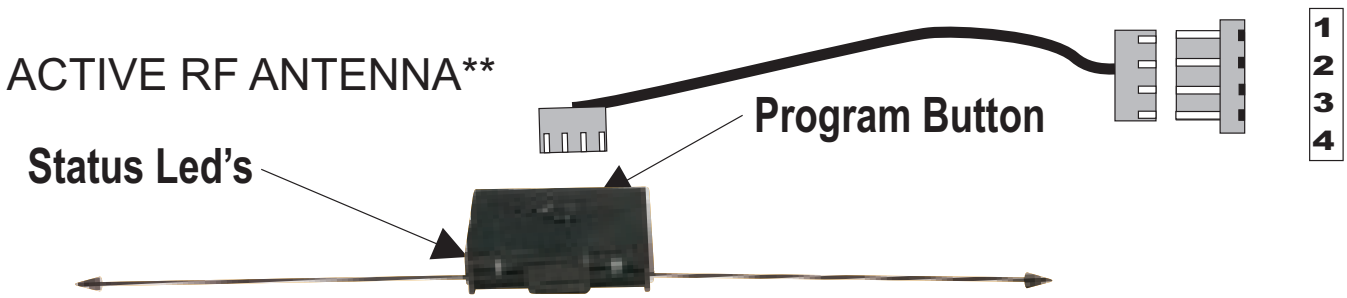

The antenna MUST be connected for the system to operate

Ground While Running Output (-)250ma	**WHITE/VIOLET**
Ground Output (-)250ma	**BLACK**
12Volt Output (+)250ma	**RED**

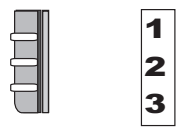

Output on Pink White	Jumper position
Second Starter	Position 1
Second Accessory	Position 2
Second Ignition	**Position 3**

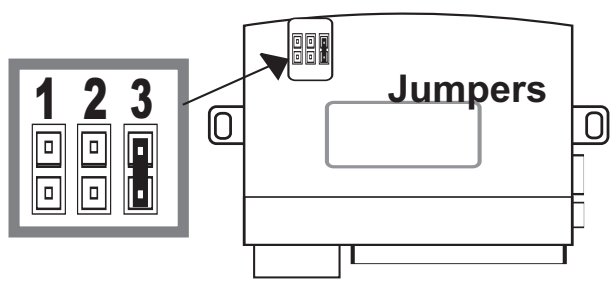

NOTE: The jumpers control the output from the **PINK/WHITE** wire on the main 6- pin harness. This is an **30amp relayed output**.

***The factory default setting of the Selectable Output jumper is position #3.**

Wire Description

MAIN CONNECTOR (6pin)

Pin	Function	*Description*
1-PURPLE	**Starter Output**	*This wire will test 0V in OFF, ACCESSORY and in the ON key positions. 12v during START ONLY.*
2-ORANGE	**Heater/Acc Output -**	*This wire will test 0V in the OFF and START key positions. 12-14V in the ACCESSORY and RUN key positions.*
3-RED	**12volt Input(30amp)** -	*Supplies 12votls for the IGNITION, PARK LIGHT and SELECTABLE outputs.*
4-RED	**12volt Input(30amp) -**	*Supplies 12 volts for ACCESSORY and STARTER outputs.*
5-PINK	**Ignition Output -**	*This wire will test 0V in the OFF and ACCESSORY key positions.12V in the IGNITION, START and RUN positions*
6-PNK/WHT	**Selectable Output -**	*Output for 2nd IGNITION, 2nd ACCESSORY or 2nd STARTER.*

AUXILIARY CONNECTOR (14pin)

Pin	Function	*Description*
1-BLUE	**Re-arm(-) -**	*0.75 second pulse output when 🔒 is pressed and after remote start shutdown. Used for factory alarm re-arm.*
2-RED/WHT	**Trunk Release(-) -**	*Programmable output. Hold 🔓 or # button for 3 seconds, output will stay active (max 5 seconds) or (-)park light.*
3-GREEN/BLK	**Dis-arm(-) -**	*0.75 second pulse when 🔓 and is pressed and before remote starter activation. Used for factory alarm dis-arm.*
4-ORANGE	**Ground When Running(-) -**	*Output active during remote start.* **/Starter Kill (-)** *Programmable Starter Kill.*
5-BROWN	**Horn(-) -**	*Output to activate factory horn.*
6-BLK/WHT	**No Connection**	
7-VIOLET	**No Connection**	
8-WHITE	**Park Light(+) -**	*10amp positive output to activate park lights. Programmable output*

Continued on next page...

Wire Description

Pin	Function	*Description*
9-GRAY	**Hood Pin(-)** -	*Input to detect ground when hood is open.* MUST BE CONNECTED.
10-GREEN	**No Connection**	
11-BLACK	**Ground(-)** -	*System chassis ground input.*
12-PINK	**Brake Light (+)** -	*Positive brake light switch input. Used to detect the brake switch being applied.*
13-VIOLET/ WHITE	**Tach(A/C)** -	*A/C Tach signal input. Used to detect engine speed to indicate vehicle is running.* (Coil, Injector, cam/crank position sensors) MUST BE CONNECTED
14-GRAY/ BLACK	**Diesel (-)** -	*Programmable Wait to Start Input. Detects negative signals. This wire also acts as an "instant start wire" when ignition is off.*

LOCK/ UNLOCK CONNECTOR (3pin red)

Pin	Function	*Description*
1-GREEN	**Lock (-)** -	*Programmable LOCK output. (Menu 1)*
2-EMPTY		
3-BLUE	**Unlock (-)** -	*Programmable UNLOCK output. (Menu 1)*

ANTENNA CONNECTOR (4pin Blue)

RF Antenna with Program Button and LEDs

AUXILIARY CONNECTOR (3pin white)

Pin	Function	*Description*
1-WHITE/ VIOLET	**Ground While Running(-)** -	*250ma ground output while remote starter is active.*
2-BLACK	**Ground(-)** -	*250ma ground output.*
3-RED	**12volts(+)** -	*250ma 12volt output.*

Important!
Never install an AUTOMATIC TRANSMISSION module into a MANUAL TRANSMISSION vehicle!

Basic Installation- **Connect All Of the Following Wires**

Main Connector (6pin)

PURPLE	**Starter Output** - *12volts during start position only.*
ORANGE	**Heater/Acc Output** - *12volts in the accessory position off during start and 14volts during run.*
RED	**12volt 30amp Input** - *12volts from ignition harness or battery.*
RED	**12volt 30amp Input** - *12volts from ignition harness or battery.*
PINK	**Ignition Output** - *12volts in the ignition, start and run positions.*
PINK/ WHITE*	**Selectable Output** - *Selectable Output for vehicles that may require a 2nd Ignition, Accessory or Start.*

Auxiliary Connector (14pin)

BLACK	**System Ground Input** - *Connect to Chassis Ground.*
WHITE	**Park Light Output** - *Connect to Park Light system.*
GRAY	**Hood Pin Input** - *Connect to the Hood Pin Safety Switch.*
VIOLET/WHT*	**Tach Input** - *Connect to A/C Tach source. (Above 2 volts AC)*
PINK	**Brake Switch Input** - *Connect to (+) when the brake pedal is applied.*

System Reset

The system reset will clear any changes made to the Program Menu's as well as the Tach setting. When the system reset is complete the system must be Tach learned before the remote starter will operate.

1) Turn the ignition key from "Off" to "On" 3 times, **ON-OFF-ON-OFF-ON** within three seconds**.** (Leave the key in the **ON** position)

2) Press and release the **Program Button** located on the antenna. The park lights will turn on and the horn (optional) will honk one time.

3) Then press and hold the **Program Button** until the park lights flash and the horn (optional) will honk 3 times slowly to confirm system reset.

***System is now reset to factory defaults*.**

NOTE: System Reset **does not** delete the transmitter codes from memory.

*** See the following pages for more detailed programming instructions.**

Tach Learning

NOTE: The System MUST be “Tach Learned” before the attempting to start the vehicle with the remote starter.

Tach Learning the remote starter is one of the most important steps in the installation process. Do not tach learn vehicle while the engine is in high idle. To ensure the best possible tach setting, ensure that the vehicle is at low idle/ normal operating RPM. Vehicles such as Toyota and Honda may idle much higher when the engine is warm compared to starting the vehicle when the engine is cold. The Tach Learn feature may be used to tach learn the vehicle again but at a normal engine RPM.

Learning Tach

Tach Learn can be done at any time but is most effective when it is performed while the vehicle is at normal idle RPM. The following steps should be followed for an accurate tach learn:

1) Start the vehicle and leave it running with the ignition key until the engine idles down.

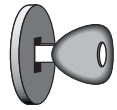

2) Press and hold the brake pedal.

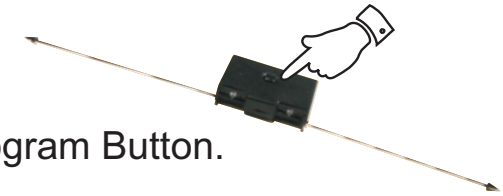

3) Press and release, then press and hold the Program Button.

4) The park lights will flash twice and the horn will honk twice to confirm a successful tach learn. If you get three flashes and three horn honks, it may be necessary to connect to a different tach source. It is also important that the ignition output from the remote starter is connected to a wire that does not turn off in the crank position. The remote starter will not tach learn if ignition is connected to the wrong wire.

TIP: “Manual Low Idle Learn”. While in “Tach Learn” mode, firmly apply the park brake and press the brake pedal. Place the transmission into reverse gear this will lower the Engine Idle.

Note - If the original Tach source is changed, tach must be re-learned before attempting to start the vehicle with the remote starter.

Remote Transmitter Learn

Important! The remote starter will hold 4 transmitter codes. It is recommended that when programming in transmitters, you fill up all four transmitter codes, even if only using one or two transmitters. This will clear all other transmitter coding from the unit and prevent stray coding or possible interference from other remote transmitters.

STEP 1 - Within 3 seconds turn the ignition key to the "**ON**" position three times leaving "**ON**" the third time.

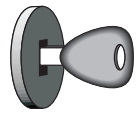

STEP 2 - **Press and hold the Program Button.** The park lights will turn "**ON**" and the horn (optional) will honk once. **Continue to hold the Program Button**, the park lights will turn "**OFF**" and the horn (optional) will honk 5 times quickly.

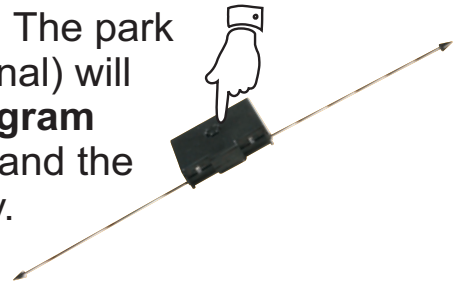

NOTE: If the parking lights do not turn "ON", release the Program Button and turn the ignition to the "OFF" position, wait 5sec and repeat steps 1 & 2.

STEP 3a (Default) - While holding the Program Button, press and release the 🔒 button on each of the remote transmitters to be programmed. If using two transmitters, code in each transmitter twice.

STEP 3b (2nd Car) - While holding the Program Button, press and hold the Status button on the second car remote until the blue light on the remote comes on solid and within 3 seconds push the 🔒 button.

2nd Car function allows the operation of two remote starter systems (in two separate vehicles) with one remote transmitter.

Example: Press and hold the Status *button until the blue light stays on and then within 3 seconds press whichever function you wish to perform.*

NOTE: Some features not available with 2nd car mode.

Entering Program Mode

Ignition On Off-On-Off On	Press & Release the Program Button 3 Times.	For Menu 1, press the button	For Menu 2, press the button	For Menu 3, press the button

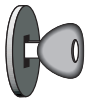

1) With the ignition in the OFF position, turn the ignition key from “Off” to “On” 3 times, ON-OFF-ON-OFF-ON within three seconds.

NOTE: Leave the key in the ON position

2) Press and release the Program Button. The park lights will flash and the horn (optional) will honk to confirm entering program mode.

3) Select desired Program Menu (See below). The park lights will flash and horn (optional) will honk to confirm the selected menu.

4) Select Programmable Setting:

a) *Press and release* the Program Button the correct number of times to select the desired Program Setting. The park lights and LEDs will flash and the horn (optional) will honk to indicate the Program Setting that has been selected. *For example*: 1 flash/honk= Program Setting 1;
2 flashes/honks= Program Setting 2; etc…

b) *Press and Hold* the Program Button until the park lights flash and the horn(optional) honks to confirm the desired setting. *For example*: 1 flash/honk= Setting 1; 2 flashes/honks= Setting 2; 3 flashes/honks= Setting 3.

c) Turning the ignition key to the “Off” position or 30 seconds of no activity will exit Program Mode. This will be confirmed with a light flash and a long horn (optional) honk. The Program Menu may be changed at any time by pressing the transmitter button (below), this will allow the installer to jump from one menu, then quickly jump to another menu and change another setting without re-entering Program Mode.

Program Menus

Menu 1: User Settings (Button)

This program menu is for the adjustments for the user and door lock options.

Menu 2: Additional Settings (Button)

This program menu is for additional settings.

Menu 3: Starter Settings (Button)

This program menu is for various remote car starter applications.

Quick View Programming

****** Bold text indicates default settings ******

MENU 1 (LOCK button)		1 Flash	2 Flashes	3 Flashes
M1-1	Ignition Auto Lock/Unlock	Enabled	Lock only	**Disabled**
M1-2	Door Lock Options	Double unlock	3 second pulses	**750ms pulses**
M1-3	Unlock/Disarm Pulse Duration	125ms pulses	**750ms pulses**	
M1-4	Special Doorlock Options	Type 1	Type 2	**Normal**
M1-5	Horn Honks	Type 1	Type 2	**All horn honks**
M1-6	Horn Honk timing	5ms output	50ms output	**10ms output**

MENU 2 (UNLOCK button)		1 Flash	2 Flashes	3 Flashes
M2-1	Safety Start Mode	Press start twice	**Press start once**	
M2-2	Parking Light Output	On for 30 seconds	(-) Parking lights	**(+) Parking lights**
M2-3	Button 4 (#) operation	Trunk release	**Car finder**	
M2-4	Rearm Output	Type 1	Type 2	**Rearm**
M2-5	Starter Disable/GWR	Active	Passive	**GWR**
M2-6	Secure Valet Mode	15 seconds	**5 seconds**	

MENU 3 (START button)		1 Flash	2 Flashes	3 Flashes
M3-1	Gas/Diesel	15 seconds	**Gas/Negative (-)**	
M3-2	Run time	4 minutes	45 minutes	**15 minutes**
M3-3	Crank time	10 seconds	3 seconds	**5 seconds**

Menu 1- User Settings

****Bold text indicates default settings****

M1–1 Ignition Auto Lock

1. Enable – Doors Lock/Unlock with ignition key on/off
2. Ignition Lock – Doors Lock when ignition is turned on
3. **Disable – Lock/Unlock wit remote transmitter ONLY**

M1–2 Door Lock Options

1. Double Unlock Pulse - .75 second lock & 2 – unlock pulses
2. 3 Second Lock & Unlock – 3 second lock and unlock pulses
3. **.75 Second Lock & Unlock - .75 second lock and unlock pulses**

M1-3 Unlock/Disarm Pulse Duration

1. Short Pulses - .125 second pulses on Unlock & Disarm outputs
2. **Normal Pulses - .75 second pulses on Unlock and Disarm outputs**

M1-4 Lock/Unlock Type (Special Door Lock/Unlock Operations)

1. Type 1 – Unlock before start. Lock pulse after start and after shutdown
2. Type 2 – Lock pulse after remote start shutdown
3. **Default Lock/Unlock Pulses**

M1-5 Horn Honk Settings

1. Type 1 – Lock/Unlock Chirps Disable – Honks for Panic & Car Finder only
2. Type 2 – Lock/Unlock Chirps Enable – All honks EXCEPT for START
3. **All Chirps Enable – Honks for all features**

M1-6 Horn Honk Timing

1. 5 ms Horn Output Pulses
2. 50 ms Horn Output Pulses
3. **10 ms Horn Output Pulses**

Menu 2- Additional Settings ****Bold text indicates default settings****

M2–1 Safety Start

1. Safety On – Press the start button twice with 3 seconds to remote start
2. **Saftety Off – Press the start button once to remote start vehicle**

M2–2 Parking Light/Trunk Output

1. 30 Seconds – Parking lights stay on for 30 seconds when doors unlocked
2. Negative Parking Lights – Switches the Park Light/Trunk outputs
3. **Default On All Outputs**

M2-3 Trunk Release on (#) Button

1. (#) Button activates Trunk Release (Hold down for 3 seconds)
2. **(#) Button activates Car Finder Mode**

M2-4 Re-Arm Output

1. Type 1 – Pulse after start and with lock
2. Type 2 – Pulse after start only
3. **Factory Alarm Re-Arm – Pulse with lock and after remote starter shutdown**

M2-5 Starter Disable/GWR

1. Active – (-) When locked and during remote start (Anti-Grind)
2. Passive – (-) When locked or 30 sec. after ignition OFF and with remote start
3. **GWR – (-) Output during remote start only**

M2-6 Secure Valet Mode (time required to set VALET mode)

1. Secure Valet – Hold the VALET button for 15 seconds
2. **Normal Valet – Hold the VALET button for 5 seconds**

Menu 3- Starter Settings

****Bold text indicates default settings****

M3–1 Gas/Diesel Mode

1. Time Delay – Waits for approximately 15 seconds before cranking
2. **(-) Glow Plug input – Waits max. 90 seconds to crank (2 sec. if no signal detected)**

M3–2 Run Time

1. 4 Minutes – Runs for approx. 4 minutes when activated
2. 45 Minutes – Runs for approx. 45 minutes when activated
3. **15 Minutes – Runs for approx. 15 minutes when activated**

M3-3 Maximum Crank Time

1. 10 seconds – 10 seconds maximum that the starter will stay engaged
2. 3 seconds - 3 seconds maximum that the starter will stay engaged
3. **5 seconds - 5 seconds maximum that the starter will stay engaged**

Your Install Is Complete!

NOTES:

1) If the vehicle does not start when the remote starter is activated, the park lights will flash a diagnostic code. (See Diagnostic Chart below).

2) If the vehicle still does not start, check all connections and check for factory Anti-Theft system.

Transmitter	Vehicle lights	Problem	Solution
x	3 slow flashes	System is in valet mode	Cancel Valet Mode
5 flashes on button 2	4 slow flashes	Door Open	Manual trans. models only
5 flashes on button 3	5 slow flashes	Ignition ON	Turn off Ignition key and try again
5 flashes on button 1	5 flashes	Brakeswitch engaged	Check brakeswitch connection
5 flashes on button 4	6 flashes	Hoodswitch (hood open)	Check hoodswitch adjustment
x	7 flashes	Tach lock-out	Start vehicle with key, after 5 sec. try again

Door Lock Relay Wiring Diagrams

Negative Type Door Locks 250ma

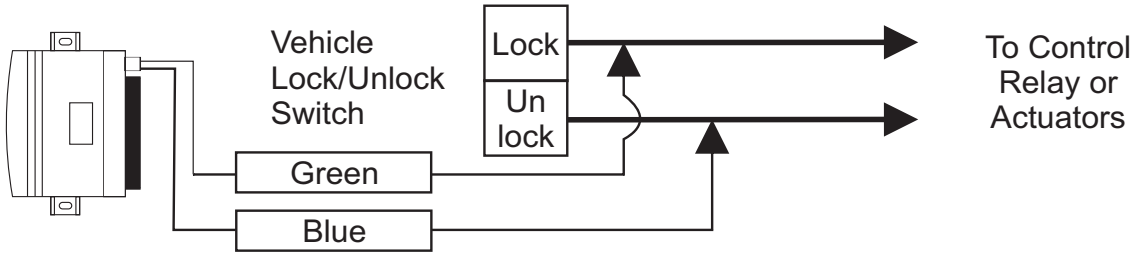

Negative Door Locks (More Than 250ma)

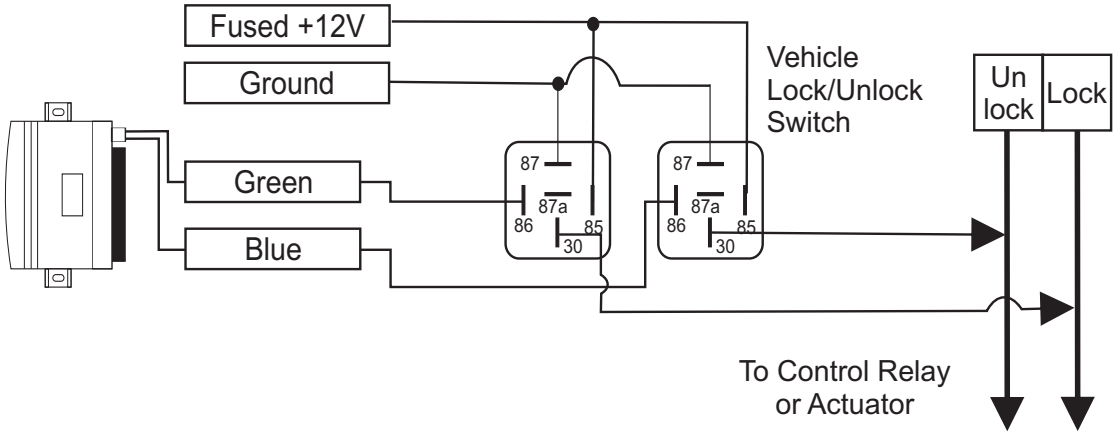

Positive Type Door Locks

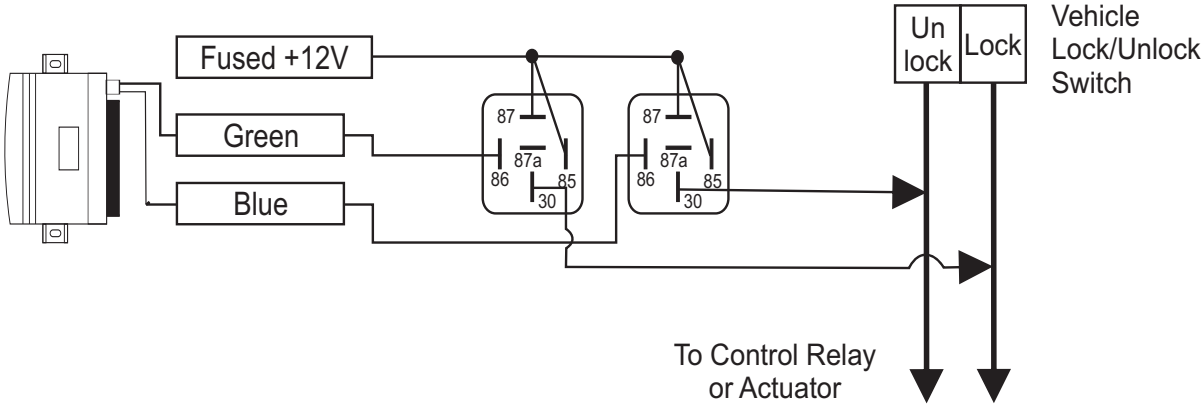

NOTE: ***When installing relays always use a fused power source.***

Door Lock Relay Wiring Diagrams

5 Wire / Reverse Polarity Type Door Locks

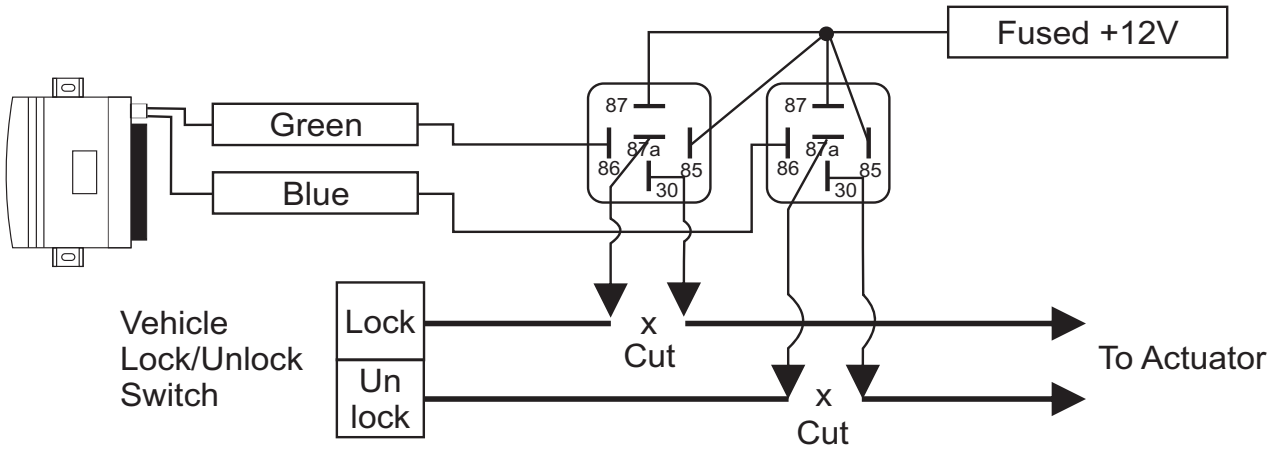

Aftermarket Doorlock Actuators

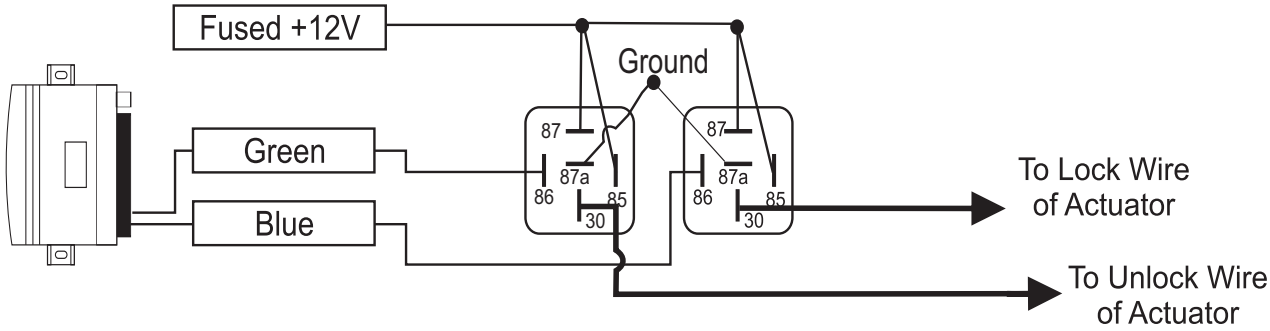

Vacuum Type Door Locks

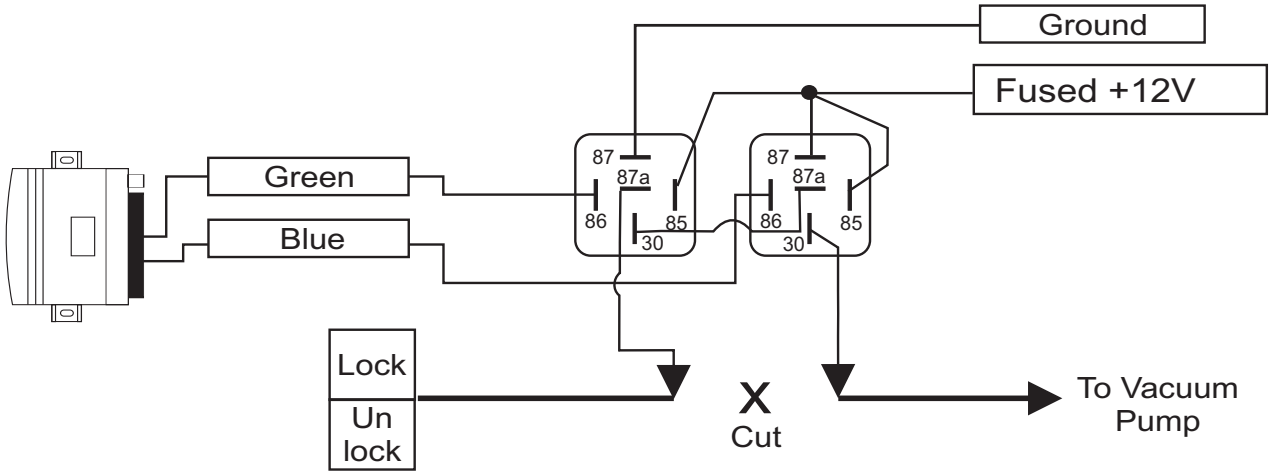

NOTE: ***When installing relays always use a fused power source.***

Titan

REMOTE STARTERS

TEXT START READY

This TS141A unit is TEXT READY. This unit is fully compatible with one of Titan's new SMS Text Messaging Systems. This new advanced technology allows you to control and monitor your vehicle from anywhere you have GSM/GPRS cellular phone coverage. Ask your Titan dealer for details about this exciting new product.

POWERED BY

Titan INNOVATIONS

TS 141A

www.titaninnovations.ca

Install Guide Revision 2.01